بهينه سازي با جدول كارنو

Karnaugh Map

Karnaugh Map

- Method of graphically representing the truth table that helps visualize adjacencies

2-variable K-map

B \ A	0	1
0	0	2
1	1	3

3-variable K-map

C \ AB	00	01	11	10
0	0	2	6	4
1	1	3	7	5

A

B

4-variable K-map

CD \ AB	00	01	11	10
00	0	4	12	8
01	1	5	13	9
11	3	7	15	11
10	2	6	14	10

A

B

C

D

Karnaugh Map

- One cell in K-map = one row in truth table
- One cell = a minterm (or a maxterm)
- Multiple-cell areas = standard terms

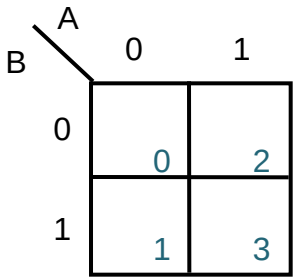

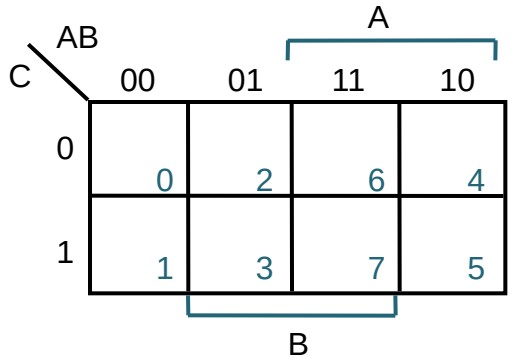

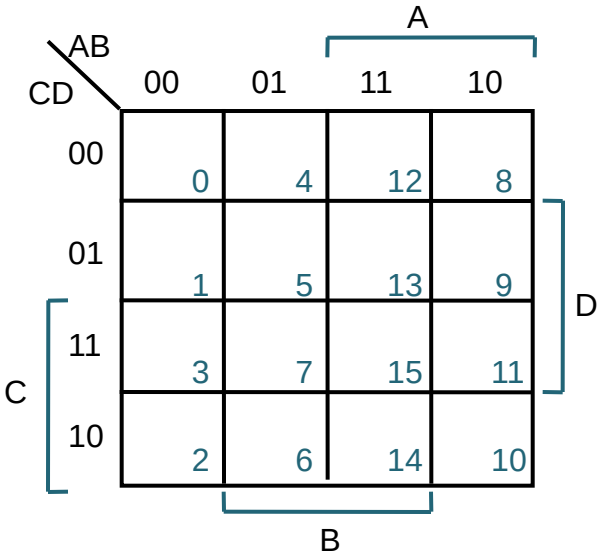

Karnaugh Map

$f_1(A,B,C) = m_1 + m_2 + m_4 + m_6$

$= A'B'C + A'BC' + AB'C' + ABC'$

A	B	C		f_1
0	0	0	m0	0
0	0	1	m1	1
0	1	0	m2	1
0	1	1	m3	0
1	0	0	m4	1
1	0	1	m5	0
1	1	0	m6	1
1	1	1	m7	0

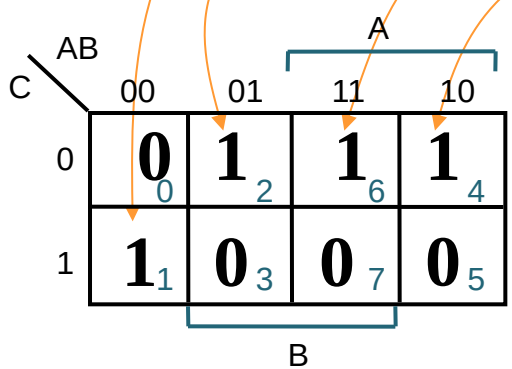

Karnaugh Map

- Numbering Scheme: 00, 01, 11, 10

  Gray Code: only a single bit changes from one code word to the next code word.

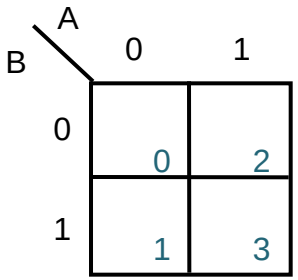

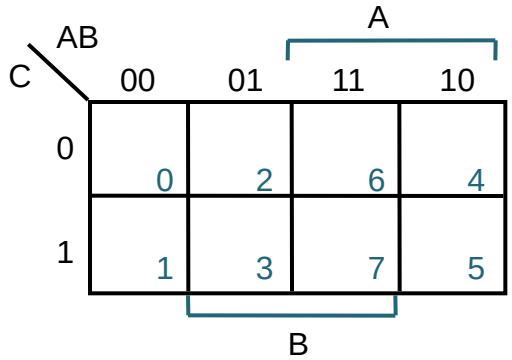

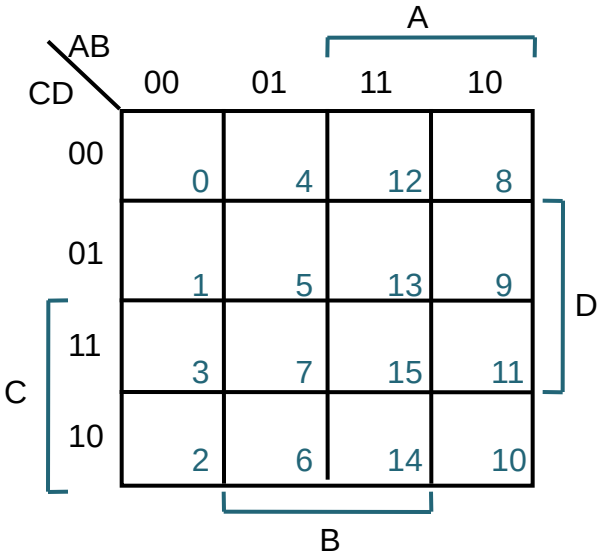

Two-Variable Map (cont.)

- Any two adjacent cells in the map differ by ONLY one variable, which appears complemented in one cell and uncomplemented in the other.

- **Example:**
  - m_0 (=A'B') is adjacent to m_1 (=A'B) and m_2 (=AB') but NOT m_3 (=AB)

B \ A	0	1
0	0	2
1	1	3

Karnaugh Map

- Adjacencies in the K-Map

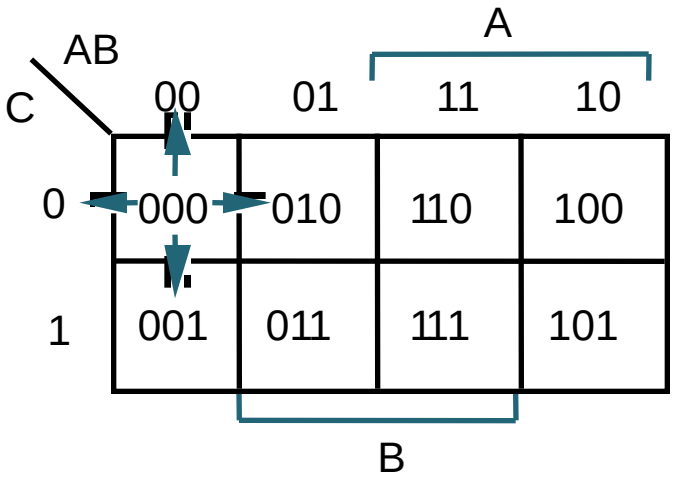

Wrap from first to last column

Top row to bottom row

2-Variable Map -- Example

- $f(x_1,x_2) = x_1'x_2' + x_1'x_2 + x_1x_2'$
  $= m_0 + m_1 + m_2$

- 1's placed in K-map for specified minterms m_0, m_1, m_2
- Grouping (ORing) of 1s allows simplification
- What (simpler) function is represented by each dashed rectangle?
  - $m_0 + m_1 = x_1'x_2' + x_1'x_2 = x_1'(x_2' + x_2) = x_1'$
  - $m_0 + m_2 = x_1'x_2' + x_1x_2' = x_2'(x_1' + x_1) = x_2'$

- Simplified form: $f(x_1,x_2) = x_1' + x_2'$
- Note m_0 is covered twice

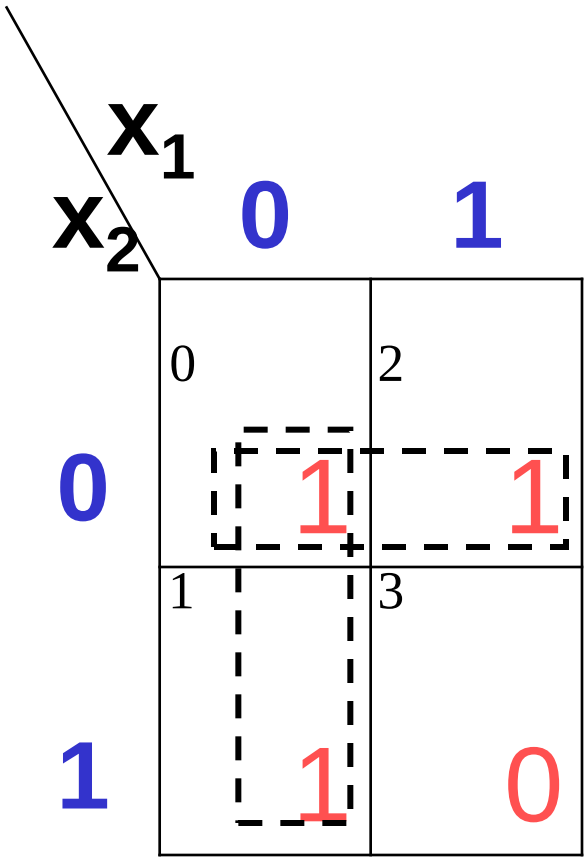

Minimization as SOP using K-map

- Enter 1's in the K-map for each product term (minterm) in the function
- Group *adjacent* K-map cells containing 1's to obtain a product with fewer variables
  - Groups must be in power of 2 (2, 4, 8, …)
- Handle "boundary wrap"
- Answer may not be unique

Minimization as SOP

B \ A	0	1
0	0	1
1	0	1

A asserted, unchanged
B varies

B complemented, unchanged
A varies

B \ A	0	1
0	1	1
1	0	0

F = ?
F = A

G = ?
G = B'

Cin \ A B	00	01	11	10
0	0	0	1	0
1	0	1	1	1

A

B

Cout = ?

Cout = AB + BCin + ACin

C \ AB	00	01	11	10
0	0	0	1	1
1	0	0	1	1

A

B

F(A,B,C) = ?
F(A,B,C) = A

More Examples

C \ AB	00	01	11	10
0	1	0	0	1
1	0	0	1	1

A

B

Why not group m4 and m5?

F(A,B,C) = Σm(0,4,5,7)

F = B' C' + A C

C \ AB	00	01	11	10
0	0	1	1	0
1	1	1	0	0

A

B

F' simply replaces 1's with 0's and vice versa

F'(A,B,C) = Σm(1,2,3,6)

F' = B C' + A' C

Simplification

- Enter minterms of the Boolean function into the map, then group terms

- **Example:**
  - $f(a,b,c) = bc' + abc + ab'$

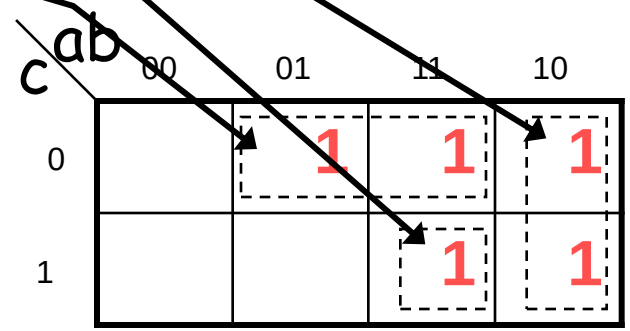

- Result: $f(a,b,c) = bc' + a$

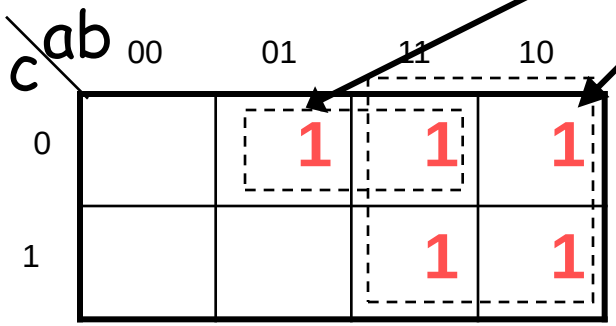

4-Variable Map

CD \ AB	00	01	11	10
00	1	0	0	1
01	0	1	0	0
11	1	1	1	1
10	1	1	1	1

A, B, C, D

F(A,B,C,D) = Σm(0,2,3,5,6,7,8,10,11,14,15)

F = ?

CD \ AB	00	01	11	10
00	m_0	m_4	m_{12}	m_8
01	m_1	m_5	m_{13}	m_9
11	m_3	m_7	m_{15}	m_{11}
10	m_2	m_6	m_{14}	m_{10}

Four-variable Map Simplification

- One square represents a minterm of 4 literals.
- A rectangle of 2 adjacent squares represents a product term of 3 literals.
- A rectangle of 4 squares represents a product term of 2 literals.
- A rectangle of 8 squares represents a product term of 1 literal.
- A rectangle of 16 squares produces a function that is equal to logic 1.

4-Variable Map

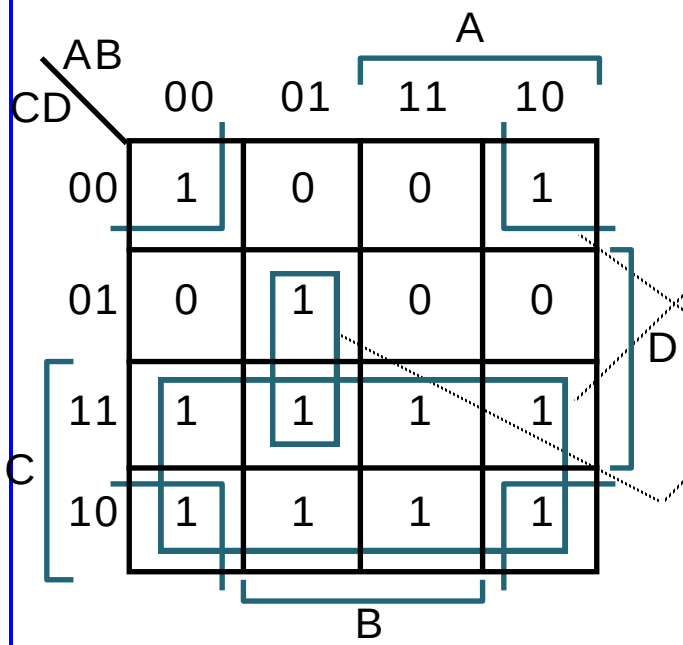

F(A,B,C,D) = Σm(0,2,3,5,6,7,8,10,11,14,15)

F = C + A' B D + B' D'

- Find the **smallest number** of the **largest possible subcubes** that cover the ON-set (for SoP)

Simplify for POS

K-map Method: covering zeros to get product of sums form

CD \ AB	00	01	11	10
00	1	0	0	1
01	0	1	0	0
11	1	1	1	1
10	1	1	1	1

F = (B’ + C + D) (A’ + C + D’) (B + C + D’)

Alternative approach:

Replace F by F’, 0’s become 1’s and vice versa

F’ = B C’ D’ + A C’ D + B’ C’ D

(F’)’ = (B C’ D’ + A C’ D + B’ C’ D)’

F = (B’ + C + D) (A’ + C + D’) (B + C + D’)

Don’t Cares

Don't Cares can be treated as 1's or 0's, whichever is more advantageous

CD \ AB	00	01	11	10
00	0	0	X	0
01	1	1	X	1
11	1	1	0	0
10	0	X	0	0

F(A,B,C,D) = Σm(1,3,5,7,9) + Σd(6,12,13)

F = A'D + B' C' D **w/o don't cares**

F = A'D + C' D **w/ don't cares**

CD \ AB	00	01	11	10
00	0	0	X	0
01	1	1	X	1
11	1	1	0	0
10	0	X	0	0

In Product of Sums form: F = D (A' + C')

Same answer as above,
but fewer gates

Example: Comparator

Design Example: Two Bit Comparator

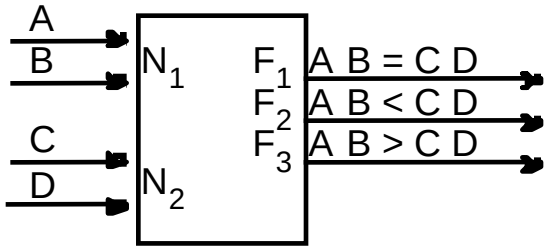

Block Diagram

A	B	C	D	F_1	F_2	F_3
0	0	0	0	1	0	0
		0	1	0	1	0
		1	0	0	1	0
		1	1	0	1	0
0	1	0	0	0	0	1
		0	1	1	0	0
		1	0	0	1	0
		1	1	0	1	0
1	0	0	0	0	0	1
		0	1	0	0	1
		1	0	1	0	0
		1	1	0	1	0
1	1	0	0	0	0	1
		0	1	0	0	1
		1	0	0	0	1
		1	1	1	0	0

Truth Table

A 4-Variable K-map for each of the 3 output functions is required

Comparator K-Maps

CD \ AB	00	01	11	10
00	1	0	0	0
01	0	1	0	0
11	0	0	1	0
10	0	0	0	1

K-map for F_1

CD \ AB	00	01	11	10
00	0	0	0	0
01	1	0	0	0
11	1	1	0	1
10	1	1	0	0

K-map for F_2

CD \ AB	00	01	11	10
00	0	1	1	1
01	0	0	1	1
11	0	0	0	0
10	0	0	1	0

K-map for F_3

F1 = A' B' C' D' + A' B C' D + A B C D + A B' C D'

F2 = A' B' D + B' C D + A' C

F3 = B C' D' + A C' + A B D'

= (A xnor C) (B xnor D) ← much simpler, but not in sum of products form
Diagonal 1's on K-map make XOR or XNOR

Example: Two Bit Adder

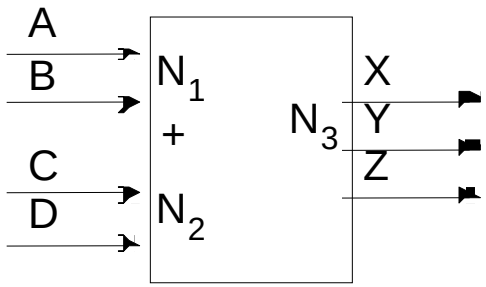

Block Diagram

A	B	C	D	X (Cout)	Y	Z
0	0	0	0	0	0	0
		0	1	0	0	1
		1	0	0	1	0
		1	1	0	1	1
0	1	0	0	0	0	1
		0	1	0	1	0
		1	0	0	1	1
		1	1	1	0	0
1	0	0	0	0	1	0
		0	1	0	1	1
		1	0	1	0	0
		1	1	1	0	1
1	1	0	0	0	1	1
		0	1	1	0	0
		1	0	1	0	1
		1	1	1	1	0

Truth Table

A 4-variable K-map for each of the 3 output functions

Adder K-Maps

CD \ AB	00	01	11	10
00	0	0	0	0
01	0	0	1	0
11	0	1	1	1
10	0	0	1	1

K-map for X

CD \ AB	00	01	11	10
00	0	0	1	1
01	0	1	0	1
11	1	0	1	0
10	1	1	0	0

K-map for Y

CD \ AB	00	01	11	10
00	0	1	1	0
01	1	0	0	1
11	1	0	0	1
10	0	1	1	0

K-map for Z

1's on diagonal suggest XOR!

X = A C + B C D + A B D

Z = B D' + B' D = B xor D

Y = A' B' C + A B' C' + A C' D' + A' C D' + A' B C' D + A B C D

= B' (A xor C) + A' B (C xor D) + A B (C xnor D)

= B' (A xor C) + B (A xor C xor D)

gate count reduced if XOR available

Implementations of Y

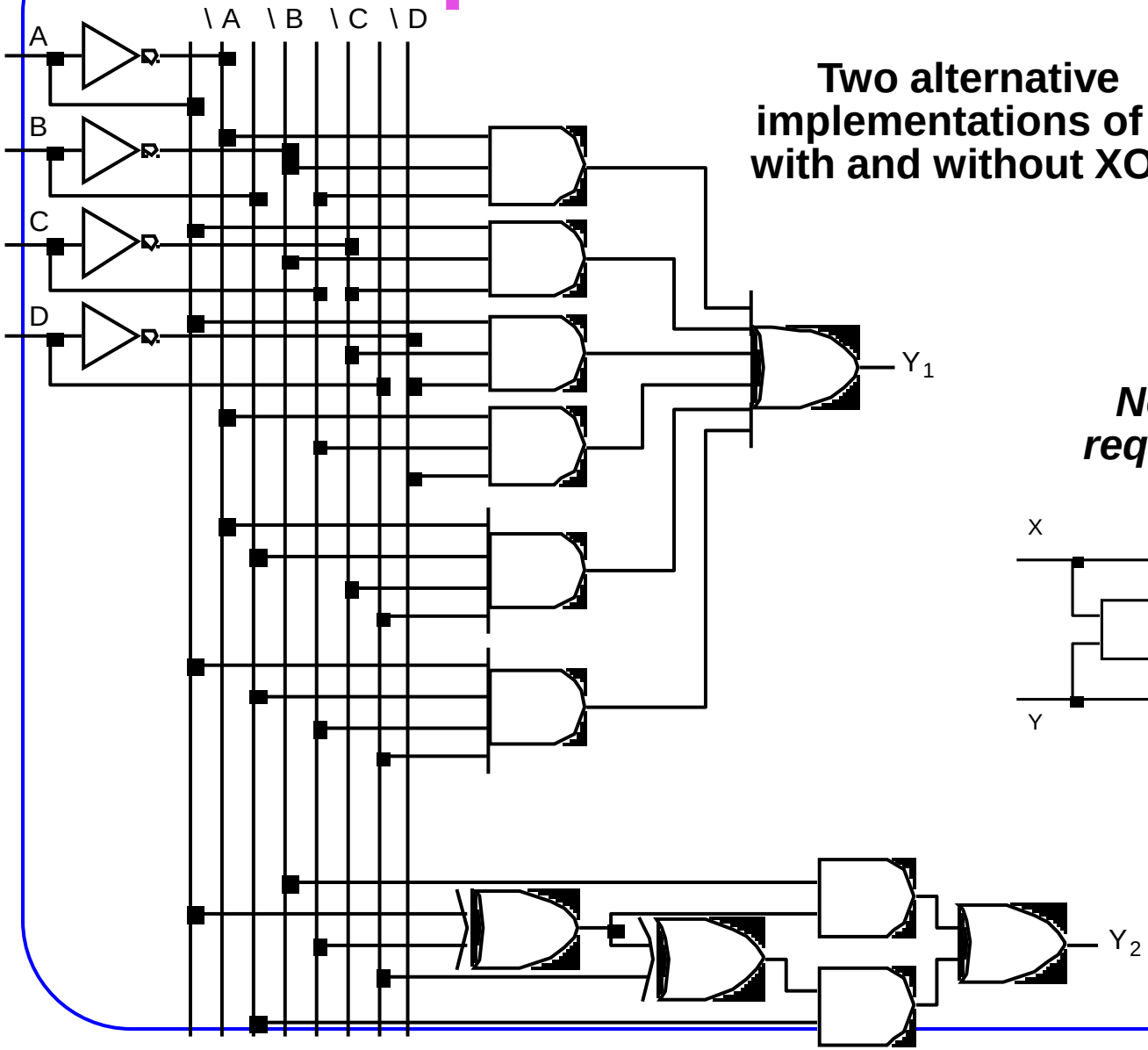

Two alternative implementations of Y with and without XOR

Note: XOR typically requires 4 NAND gates to implement!

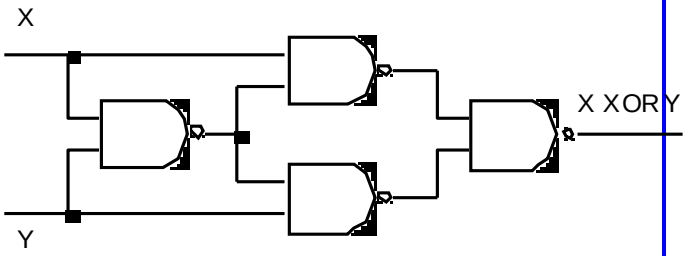

XOR

$xy' + yx' = xy' + yx' + xx' + yy'$

$x(y'+x') + y(x'+y')$

$x.(x.y)' + y.(x.y)'$

$((x.(x.y)')'.(y.(x.y)')')'$

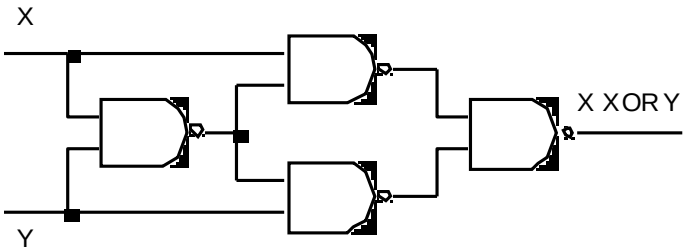

تبدیل مدارها به فقط Nand: بعداً

Example: BCD Incrementer

A	B	C	D	W	X	Y	Z
0	0	0	0	0	0	0	1
0	0	0	1	0	0	1	0
0	0	1	0	0	0	1	1
0	0	1	1	0	1	0	0
0	1	0	0	0	1	0	1
0	1	0	1	0	1	1	0
0	1	1	0	0	1	1	1
0	1	1	1	1	0	0	0
1	0	0	0	1	0	0	1
1	0	0	1	0	0	0	0
1	0	1	0	X	X	X	X
1	0	1	1	X	X	X	X
1	1	0	0	X	X	X	X
1	1	0	1	X	X	X	X
1	1	1	0	X	X	X	X
1	1	1	1	X	X	X	X

Example: BCD Incrementer

W

CD \ AB	00	01	11	10
00	0	0	X	1
01	0	0	X	0
11	0	1	X	X
10	0	0	X	X

X

CD \ AB	00	01	11	10
00	0	1	X	0
01	0	1	X	0
11	1	0	X	X
10	0	1	X	X

Y

CD \ AB	00	01	11	10
00	0	0	X	0
01	1	1	X	0
11	0	0	X	X
10	1	1	X	X

Z

CD \ AB	00	01	11	10
00	1	1	X	1
01	0	0	X	0
11	0	0	X	X
10	1	1	X	X

W = B C D + A D'

Y = A' C' D + C D'

X = B C' + B D' + B' C D

Z = D'

Order Dependency

- **Order is important**

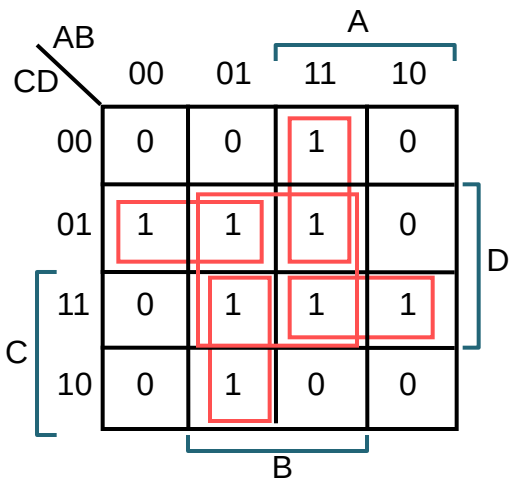

Fact: we will get different results depending on the order of groupings.

Question: can we make the approach order-independent?

Answer: yes, as can be seen in the next slides.

Definition of Terms

- **Implicant:**
  - single element of the ON-set or any group of elements that can be combined together in a K-map (= adjacency plane)

- **Prime Implicant (PI) (maximal PI):**
  - implicant (a circled set of 1-cells) satisfying the combining rule, such that if we try to make it larger (covering twice as many cells), it covers one or more 0s.

- **Distinguished 1-cell:**
  - an input combination that is covered by only one PI.

- **Essential Prime Implicant (EPI):**
  - a PI that covers one or more distinguished 1-cells.

Implicant, PI and EPI

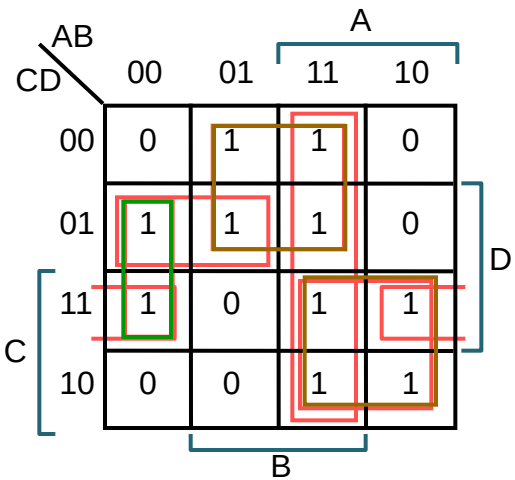

6 Prime Implicants:

A' B' D, B C', A C, A' C' D, A B, B' C D

Essential

Minimum cover =

First: cover EPIs

Then: minimum number of PIs

= B C' + A C + A' B' D

Implicant, PI and EPI

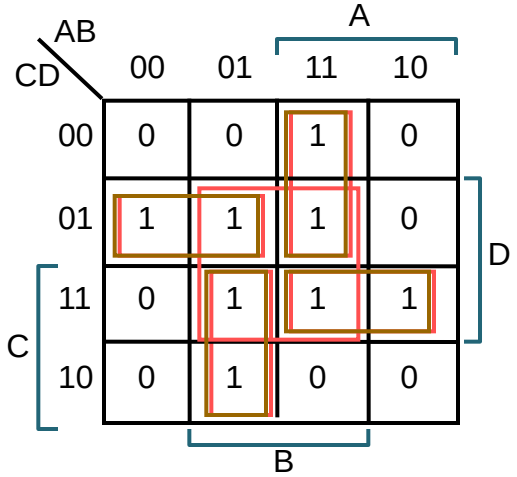

5 Prime Implicants:

B D, A B C', A C D, A' B C, A' C' D

essential

Minimum cover =

First: cover EPIs

Then: minimum number of PIs

= A B C' + A C D + A' B C + A' C' D

More Examples

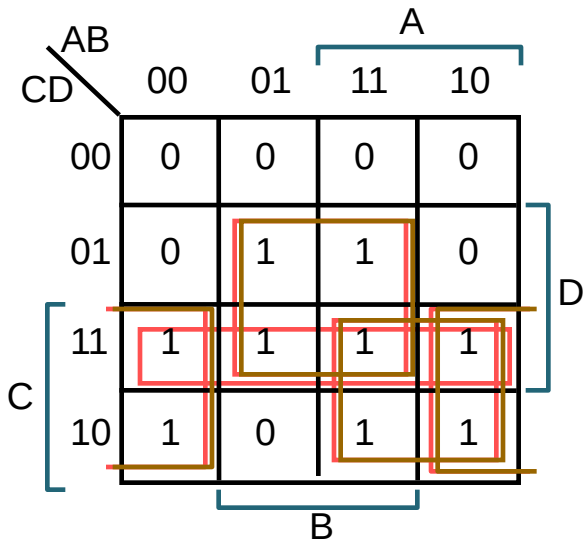

Prime Implicants:

B D, C D, A C, B' C

essential

= BD + AC + B' C

Example

What if there are don't cares in the k-map?

Example: f(A,B,C,D) = m(4,5,6,8,9,10,13) + d(0,7,15)

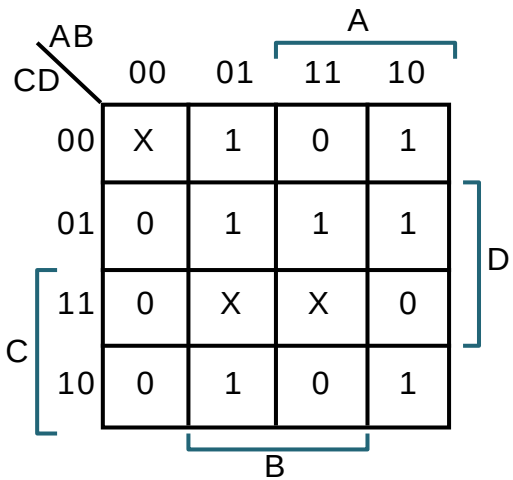

Initial K-map

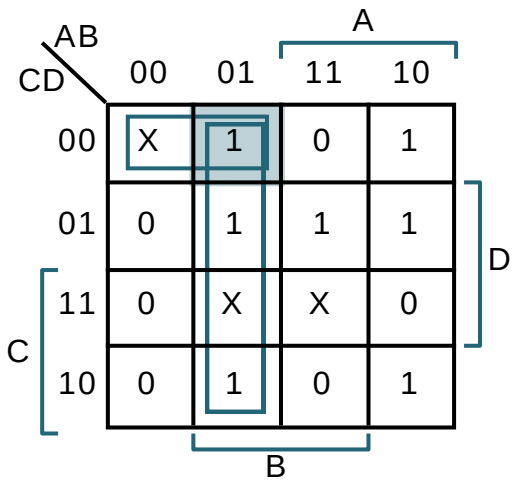

Primes around A' B C' D'

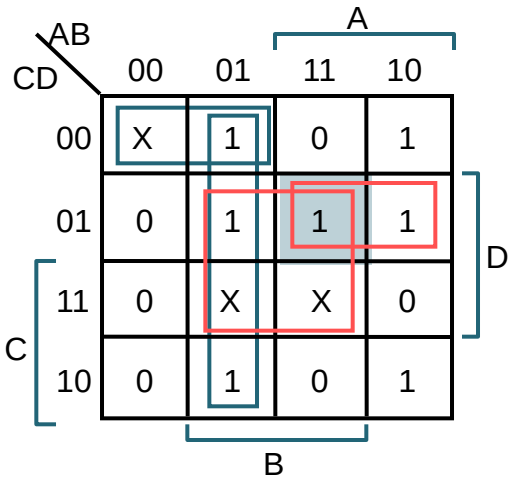

Primes around A B C' D

Example: Continued

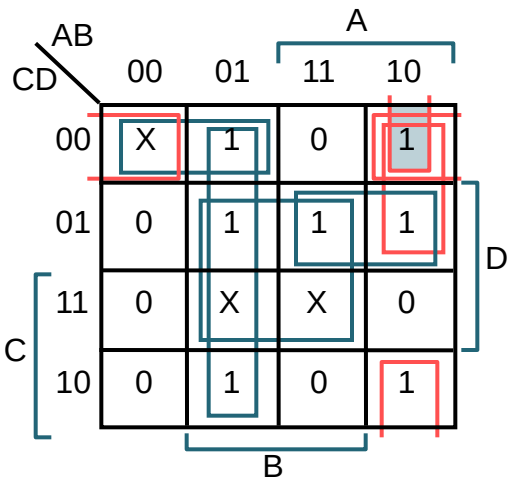

Primes around A B' C' D'

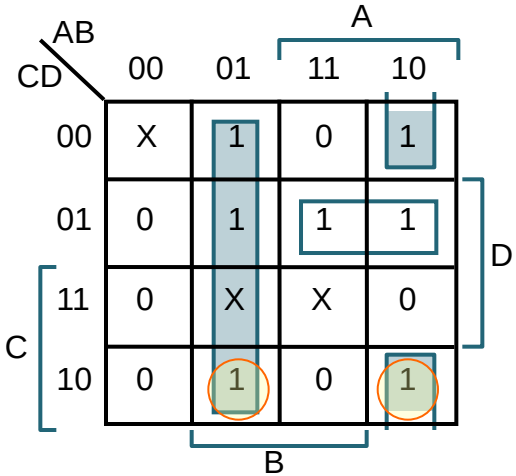

Essential Primes with Min Cover
(each element covered once)

5-Variable K-Map

Y Z \ W X	00	01	11	10
00	0	4	12	8
01	1	5	13	9
11	3	7	15	11
10	2	6	14	10

W

Z

Y

X

V=0

Y Z \ W X	00	01	11	10
00	16	20	28	24
01	17	21	29	25
11	19	23	31	27
10	18	22	30	26

W

Z

Y

X

V=1

5-Variable K-Map

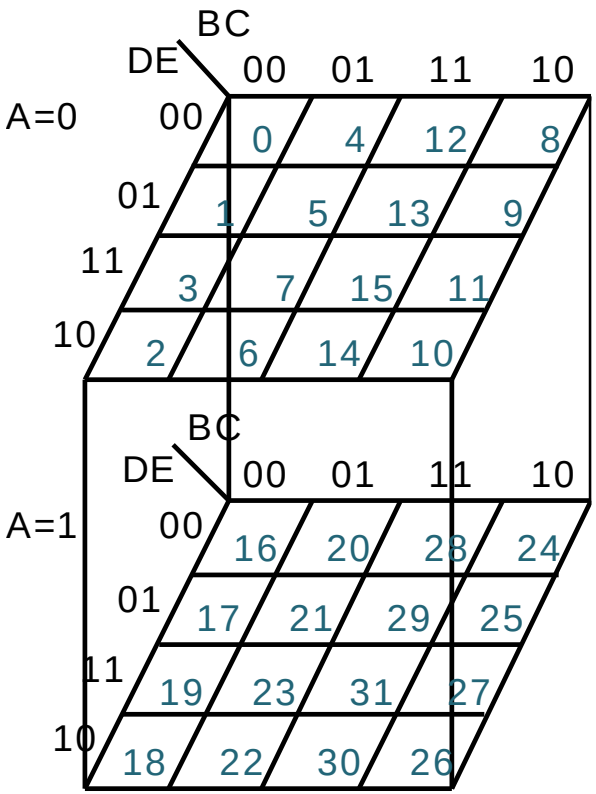

5-Variable K-Map

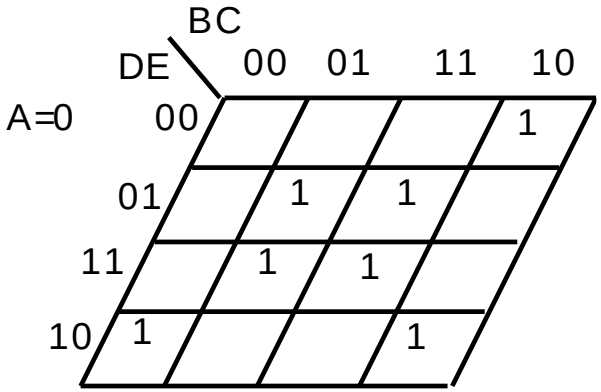

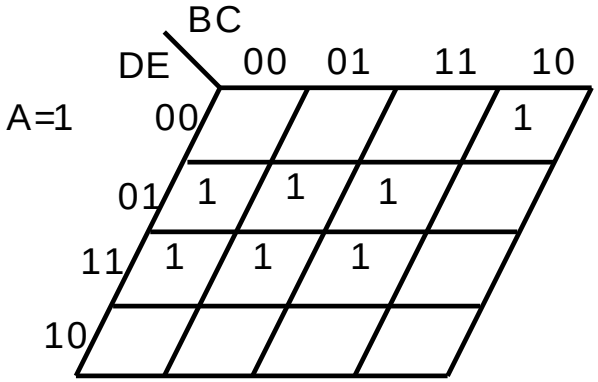

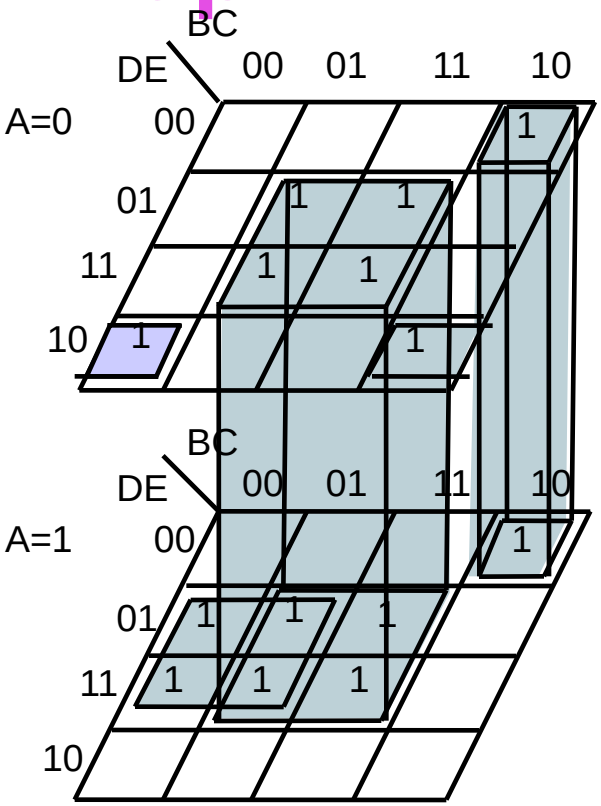

f(A,B,C,D,E) = Σm(2,5,7,8,10, 13,15,17,19,21,23,24,29,31)

= C E + A B' E + B C' D' E' + A' C' D E'

6-Variable K-Map

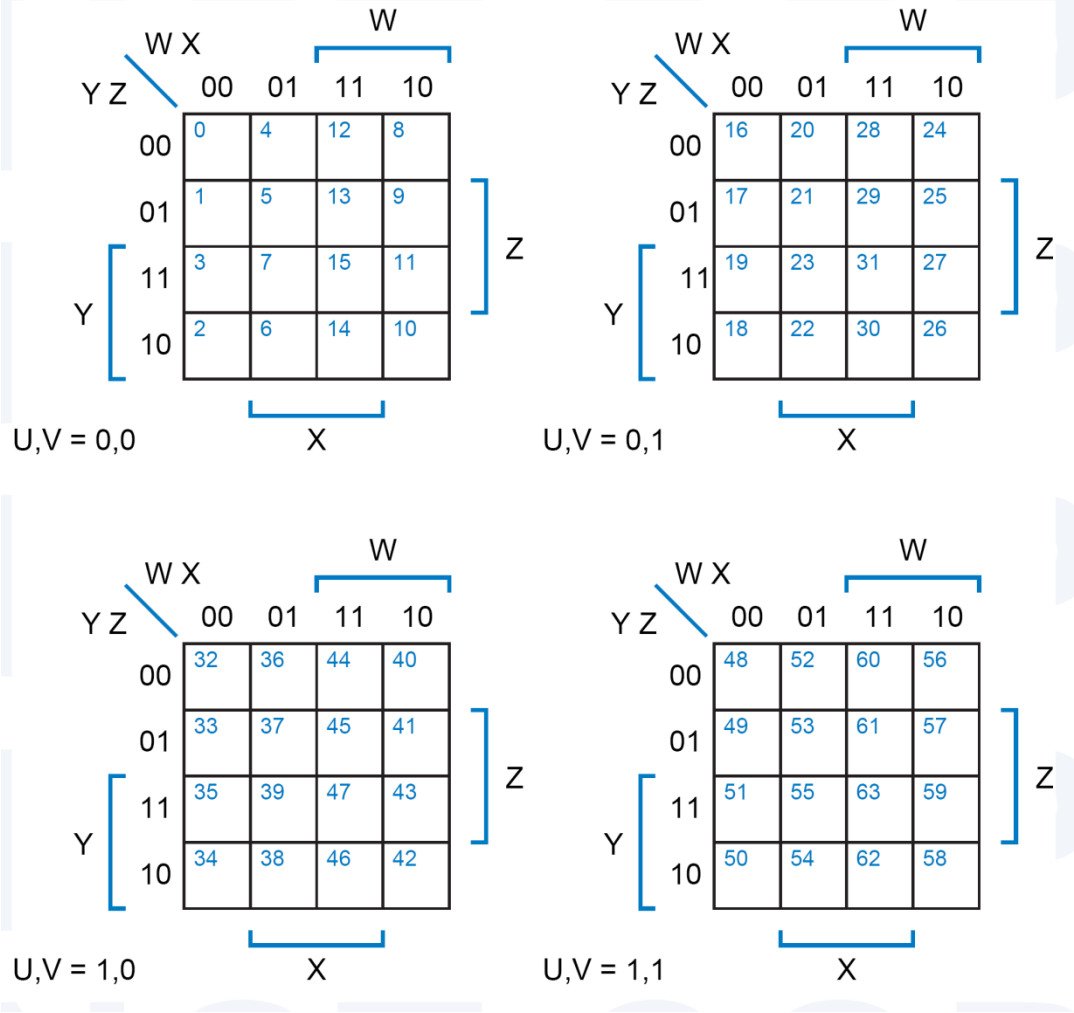

7-Variable K-Map

?

8-Variable K-Map

?

Implemention by NAND gates only

- **NAND:**
  - Universal gate
  - Can replace gates by equivalent NAND circuit.
    - Large circuit (many gates)

New Symbols for AND/OR

- **DeMorgan's Law:**
  - $(a + b)' = a' b'$ $\quad$ $(a b)' = a' + b'$
  - $a + b = (a' b')'$ $\quad$ $(a b) = (a' + b')'$

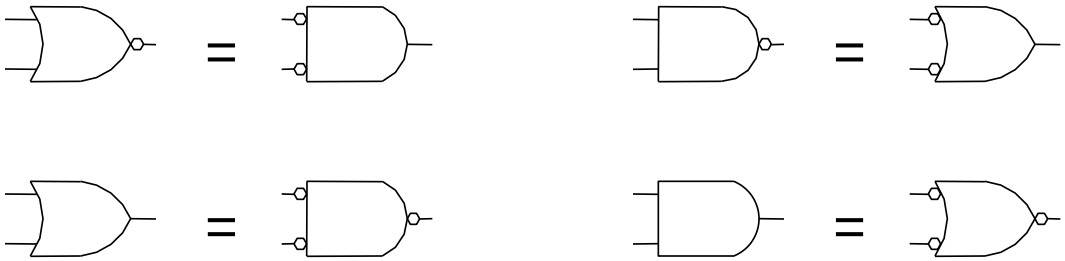

NAND-only and NOR-only implementations for NOT

- $(a \cdot a)' = a'$

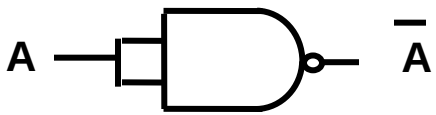

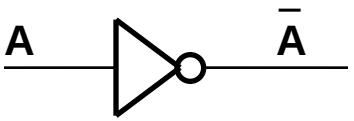

- $(a + a)' = a'$

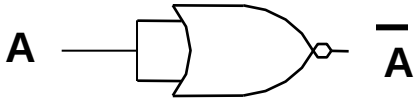

Finding NAND-only Implementation

- 1st step: Find Sum-of-Product form

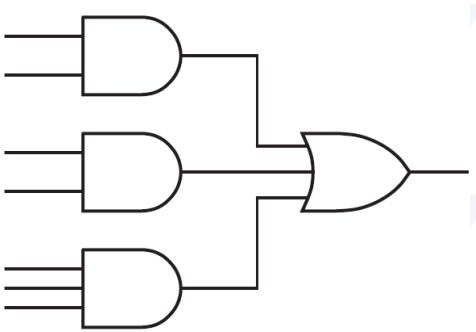

- 2nd step: Add double inverters

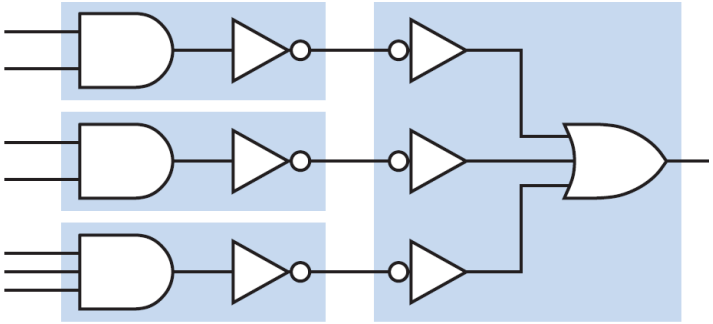

- 3rd step: Identify equivalent NANDs

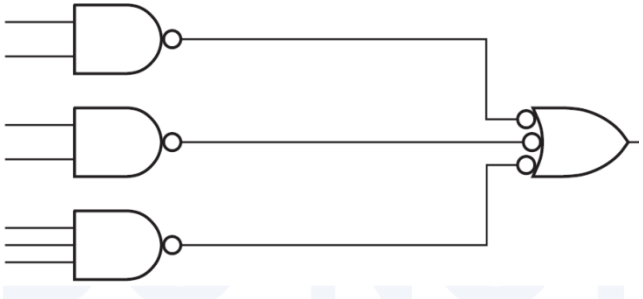

Another Example

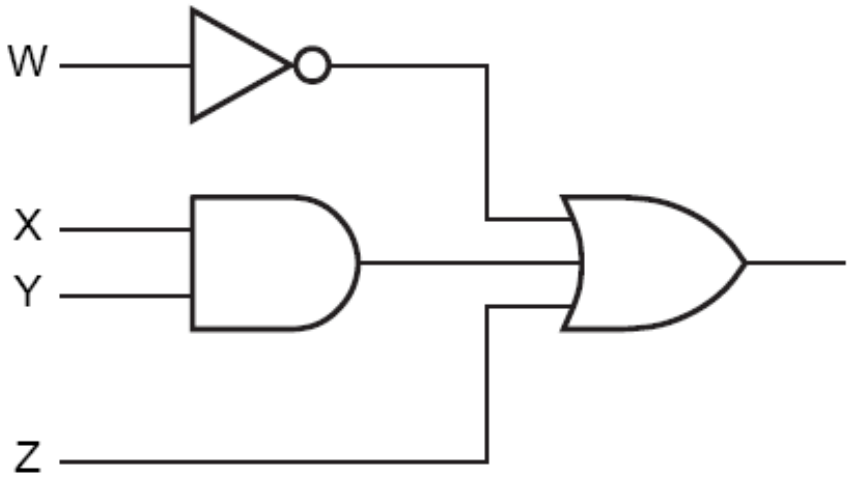

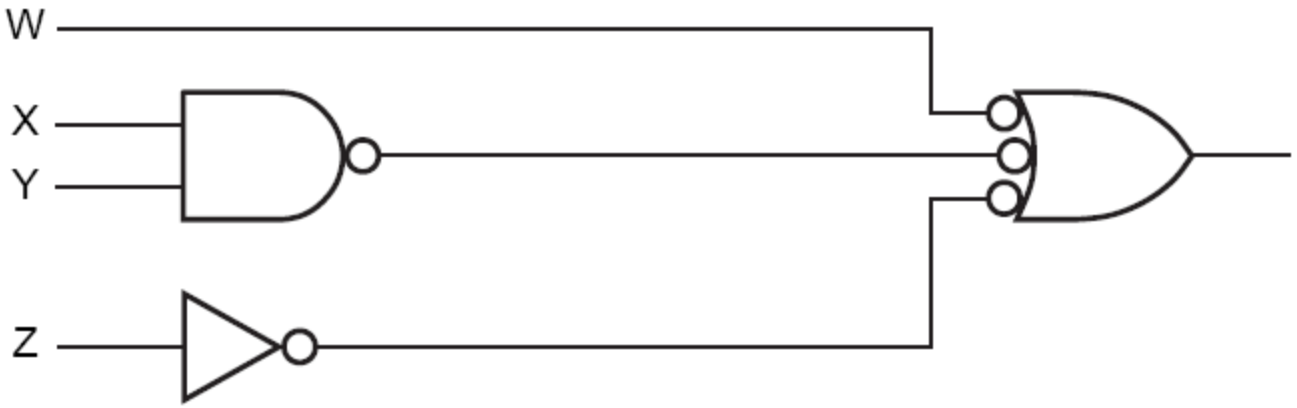

NOR-Only Implementation

- 1st step: Find Product-of-Sums form

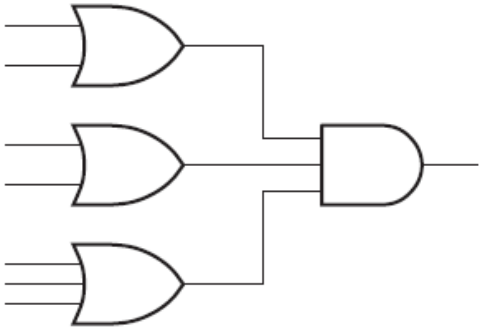

- 2nd step: Add double inverters

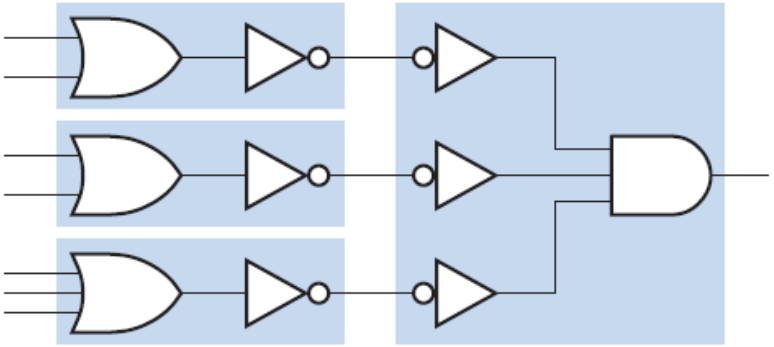

- 3rd step: Identify equivalent NORs

NAND-Only Implementation

- **NAND-only:**
  - Another method:
    - Group 0's in K-Map
    - Find F' in SOP form
    - Add an inverter at the end.

NAND-Only Implementation

- **Multi-Level Circuits**

- Convert AND/OR gates to proper NAND gates
  - AND → AND-NOT symbol
  - OR → NOT-OR symbol
- Bubbles must cancel each other;
- otherwise, insert a NAND inverter.
- Take care of appropriate input literals.

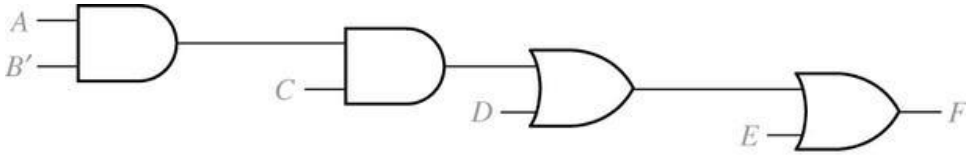

(a) AND-OR network

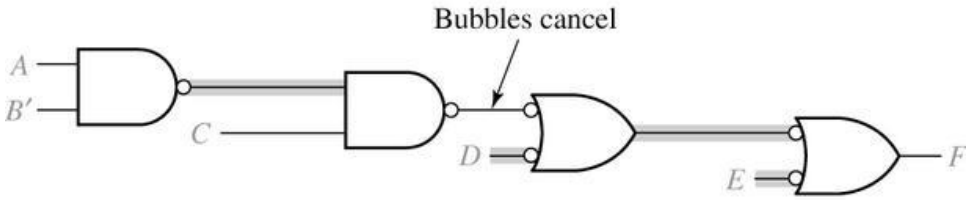

(b) First step in NAND conversion

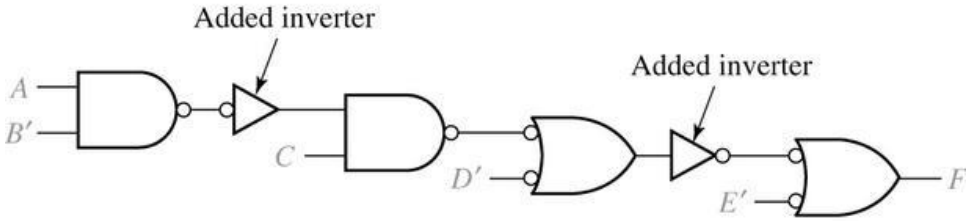

(c) Completed conversion

NAND-Only Implementation

- **Example:**

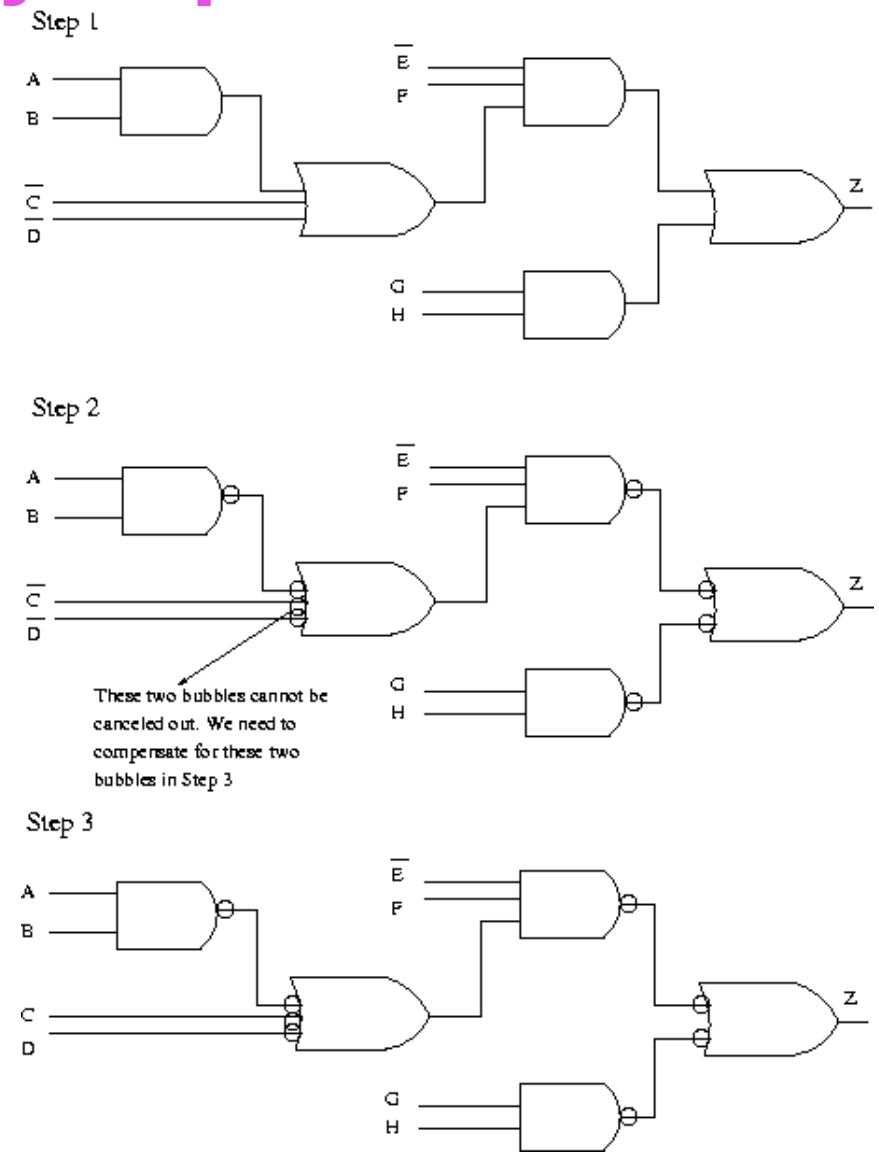

NAND-Only Implementation

- **Another Example:**

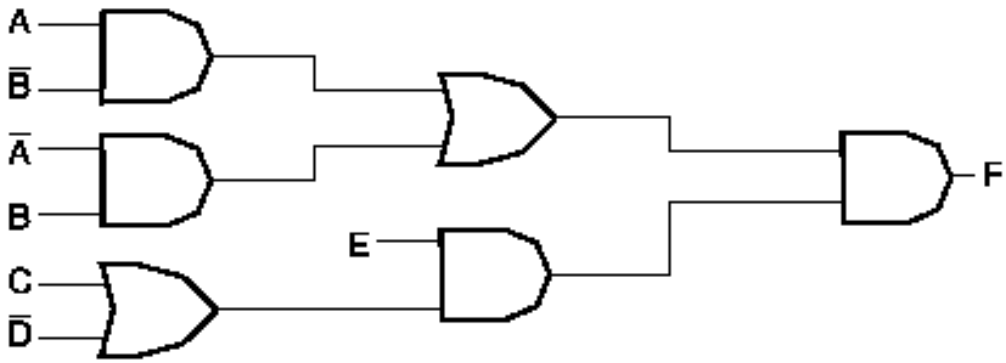

(a) AND – OR gates

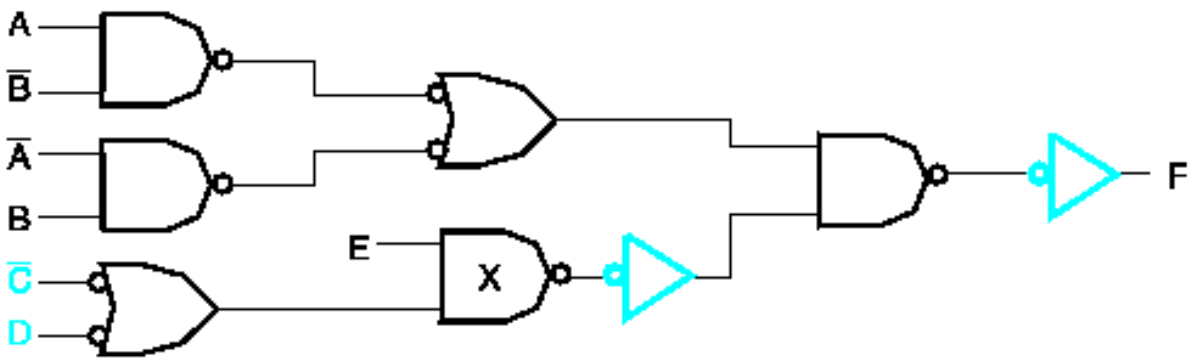

(b) NAND gates

Fig. 2-32 Implementing $F = (A\overline{B} + \overline{A}B)E(C + \overline{D})$

NAND-Only Implementation

- **Be careful about branches:**
  - Gates with multi-fanouts

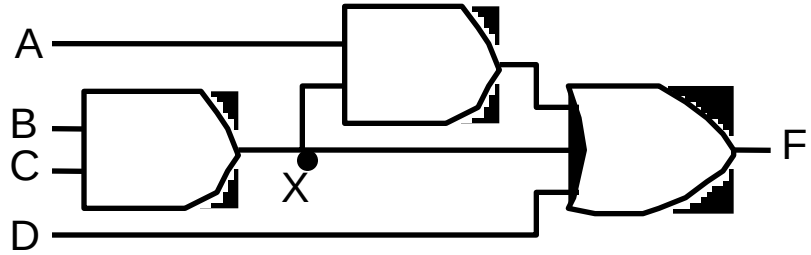

(a)

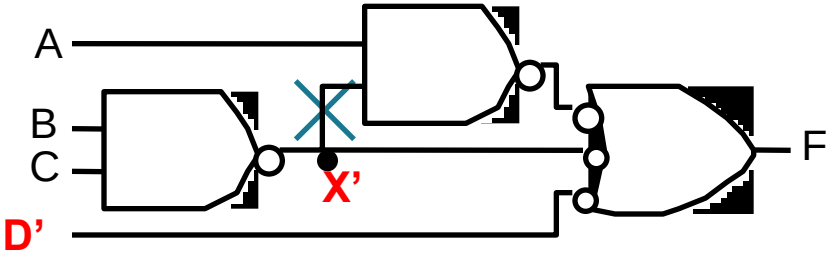

(b)

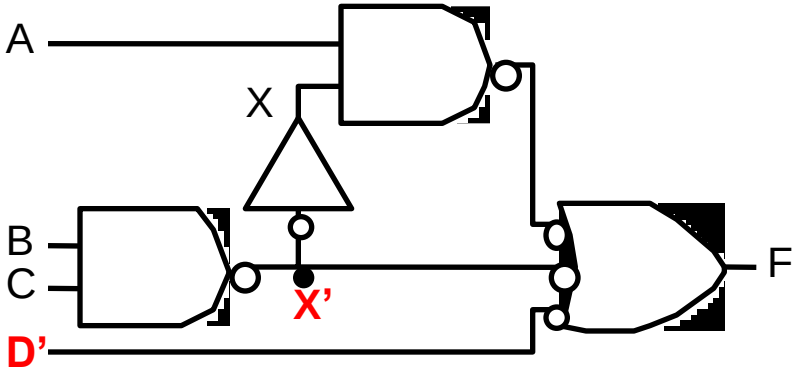

(c)

NOR-Only Implementation

- **NOR-Only:**
  - Use “Duality” for the last several slides.

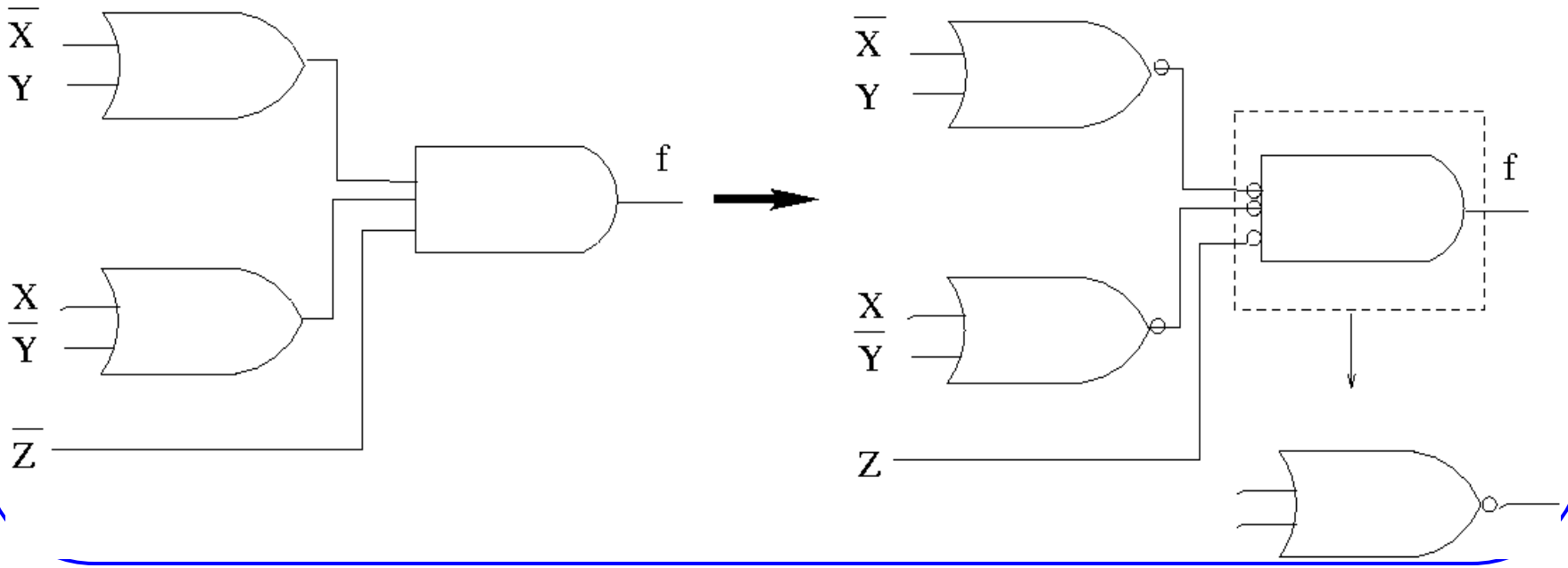

Analysis of NAND Circuits

- Finding the functionality of a NAND-only circuit may not be straightforward.
- Must be converted to AND-OR circuit.

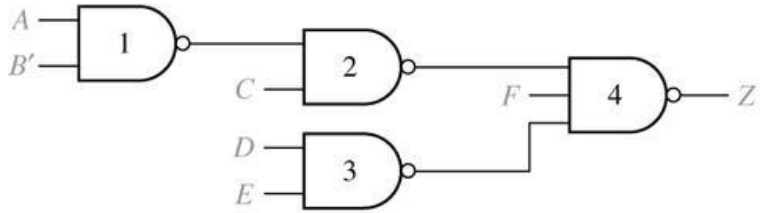

(a) NAND gate network

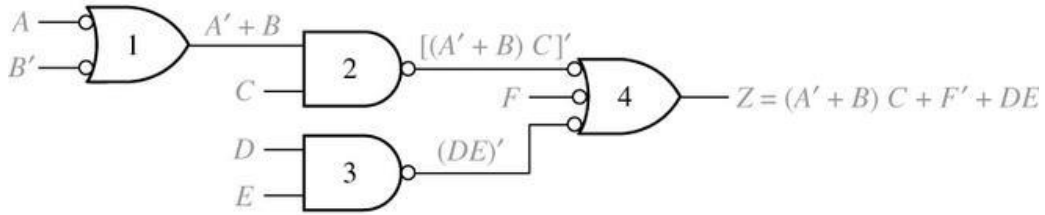

(b) Alternate form for NAND gate network

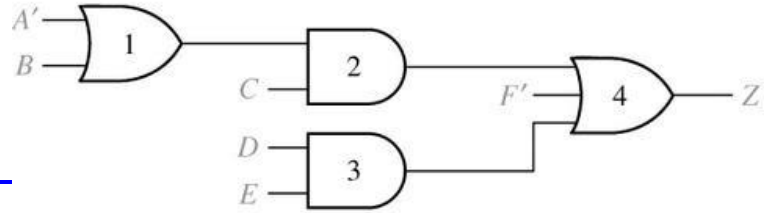

(c) Equivalent AND-OR network

Analysis of NAND Circuits

- **Example**

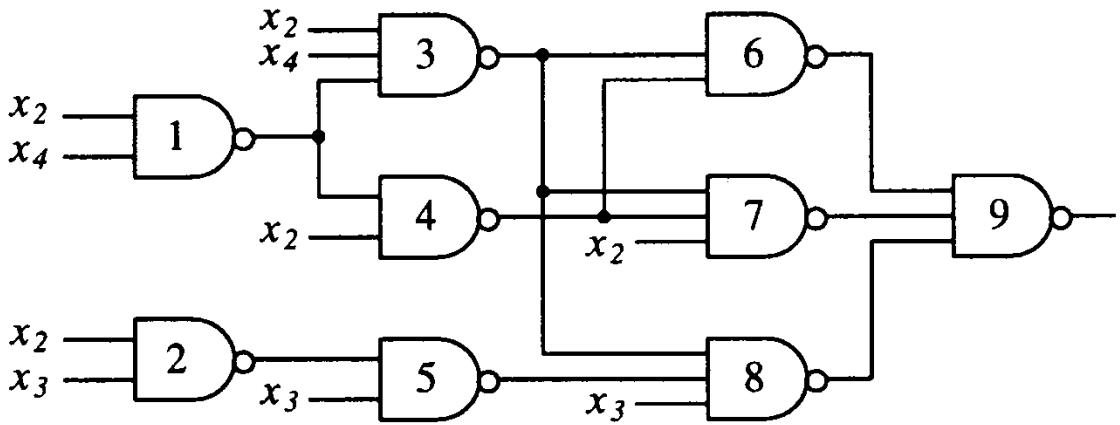

Figure 3.22 When $x_1 = 1$.

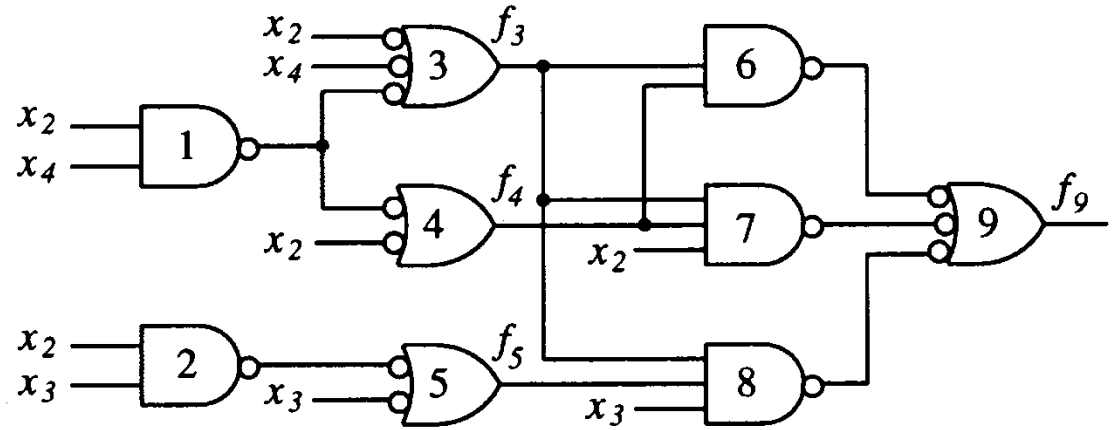

Figure 3.23 Replacement of NAND symbols.

Analysis of NAND/NOR Circuits

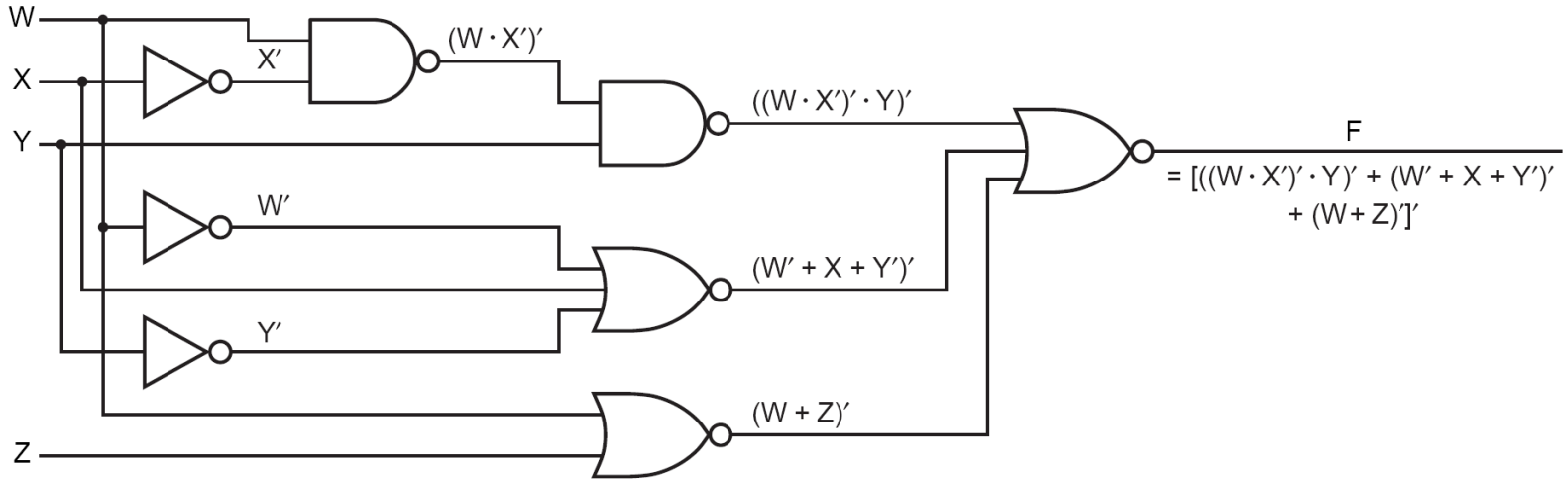

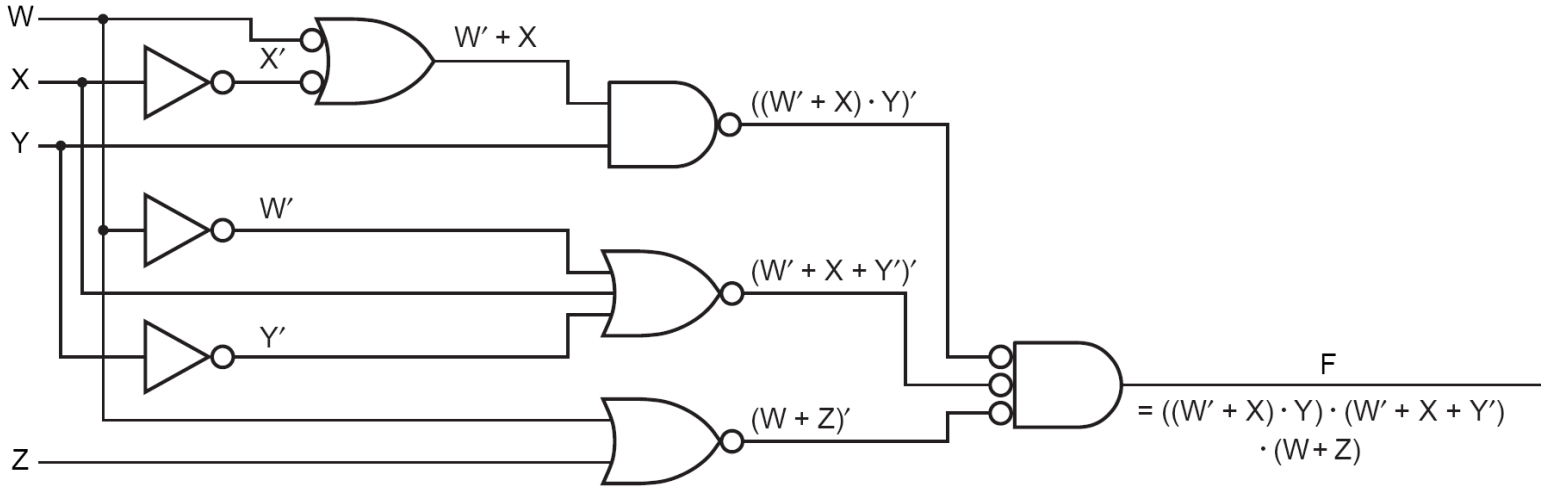
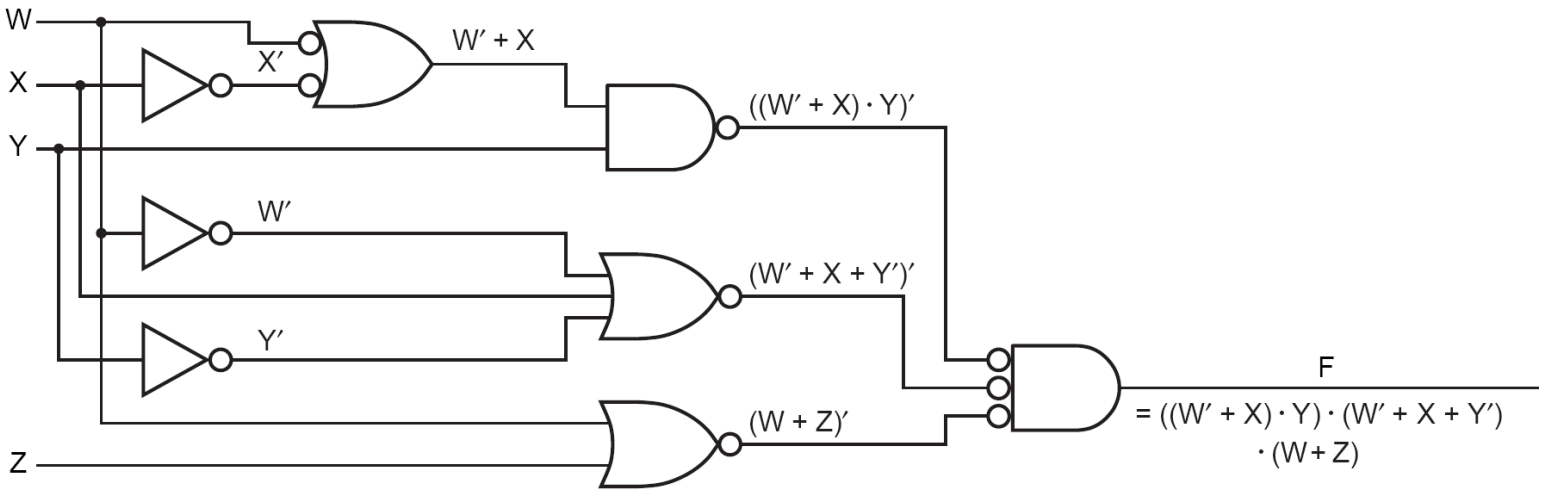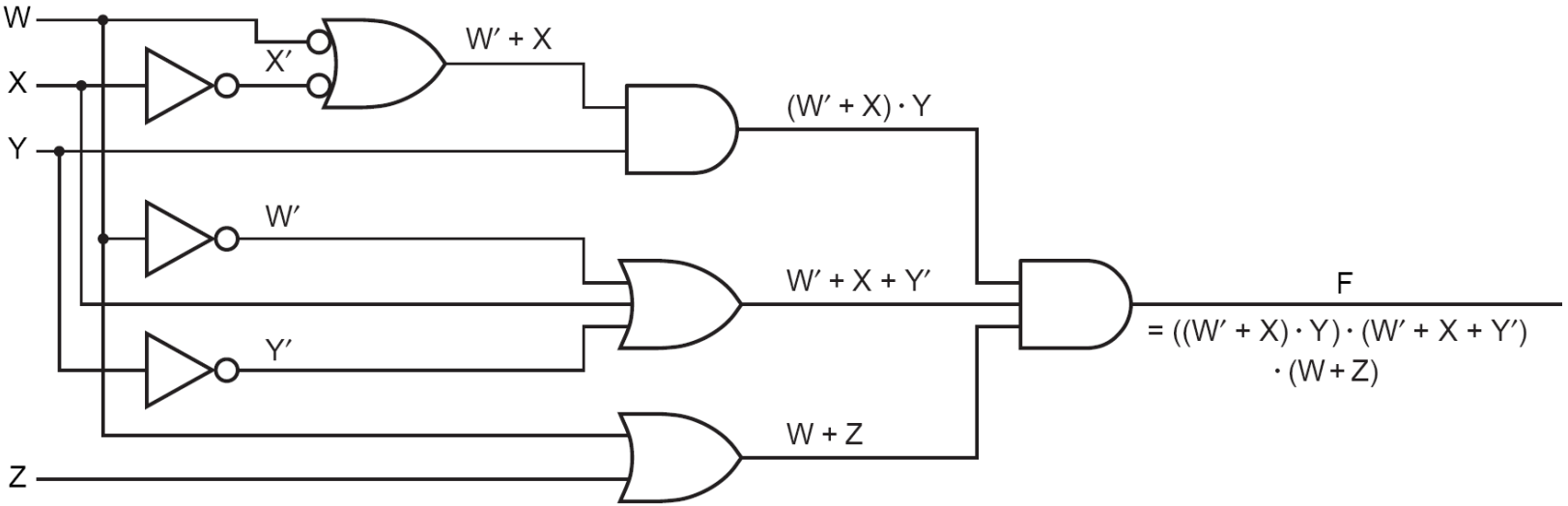
Analysis of NAND/NOR Circuits